DATA SHEET

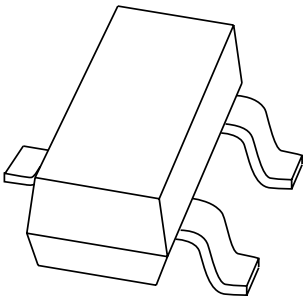

BCW71; BCW72
NPN general purpose transistors

Product data sheet
Supersedes data of 1997 Mar 06

1999 Apr 19

founded by Philips

NPN general purpose transistors BCW71; BCW72

FEATURES

- Low current (100 mA)
- Low voltage (45 V)
- Low noise.

APPLICATIONS

- General purpose switching and amplification.

DESCRIPTION

NPN transistor in a SOT23 plastic package.
PNP complements: BCW69 and BCW70.

MARKING

TYPE NUMBER	MARKING CODE(1)
BCW71	K1∗
BCW72	K2∗

Note

1. ∗ = p : Made in Hong Kong.
   ∗ = t : Made in Malaysia.

PINNING

PIN	DESCRIPTION
1	base
2	emitter
3	collector

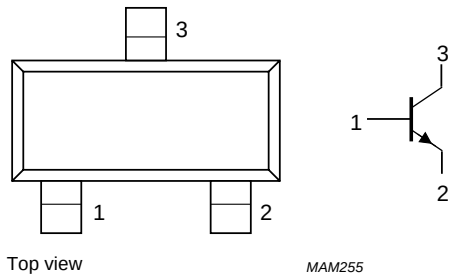

Fig.1 Simplified outline (SOT23) and symbol.

LIMITING VALUES

In accordance with the Absolute Maximum Rating System (IEC 134).

SYMBOL	PARAMETER	CONDITIONS	MIN.	MAX.	UNIT
V_{CBO}	collector-base voltage	open emitter	–	50	V
V_{CEO}	collector-emitter voltage	open base; I_C = 2 mA	–	45	V
V_{EBO}	emitter-base voltage	open collector	–	5	V
I_C	collector current (DC)		–	100	mA
I_{CM}	peak collector current		–	200	mA
I_{BM}	peak base current		–	200	mA
P_{tot}	total power dissipation	$T_{amb} \leq 25$ °C	–	250	mW
T_{stg}	storage temperature		−65	+150	°C
T_j	junction temperature		–	150	°C
T_{amb}	operating ambient temperature		−65	+150	°C

THERMAL CHARACTERISTICS

SYMBOL	PARAMETER	CONDITIONS	VALUE	UNIT
$R_{th\ j\text{-}a}$	thermal resistance from junction to ambient	note 1	500	K/W

Note

1. Transistor mounted on an FR4 printed-circuit board.

CHARACTERISTICS

T_j = 25 °C unless otherwise specified.

SYMBOL	PARAMETER	CONDITIONS	MIN.	TYP.	MAX.	UNIT
I_{CBO}	collector cut-off current	$I_E = 0$; $V_{CB} = 20$ V	–	–	100	nA
		$I_E = 0$; $V_{CB} = 20$ V; $T_j = 100$ °C	–	–	10	μA
I_{EBO}	emitter cut-off current	$I_C = 0$; $V_{EB} = 5$ V	–	–	100	μA
h_{FE}	DC current gain	$I_C = 10$ μA; $V_{CE} = 5$ V				
	BCW71		–	90	–	
	BCW72		–	150	–	
	DC current gain	$I_C = 2$ mA; $V_{CE} = 5$ V				
	BCW71		110	–	220	
	BCW72		200	–	450	
V_{CEsat}	collector-emitter saturation voltage	$I_C = 10$ mA; $I_B = 0.5$ mA	–	120	250	mV
		$I_C = 50$ mA; $I_B = 2.5$ mA	–	210	–	mV
V_{BEsat}	base-emitter saturation voltage	$I_C = 10$ mA; $I_B = 0.5$ mA	–	750	–	mV
		$I_C = 50$ mA; $I_B = 2.5$ mA	–	850	–	mV
V_{BE}	base-emitter voltage	$I_C = 2$ mA; $V_{CE} = 5$ V	550	–	700	mV
C_c	collector capacitance	$I_E = I_e = 0$; $V_{CB} = 10$ V; f = 1 MHz	–	2.5	–	pF
f_T	transition frequency	$I_C = 10$ mA; $V_{CE} = 5$ V; f = 100 MHz	100	–	–	MHz
F	noise figure	$I_C = 200$ μA; $V_{CE} = 5$ V; $R_S = 2$ kΩ; f = 1 kHz; B = 200 Hz	–	–	10	dB

PACKAGE OUTLINE

Plastic surface mounted package; 3 leads **SOT23**

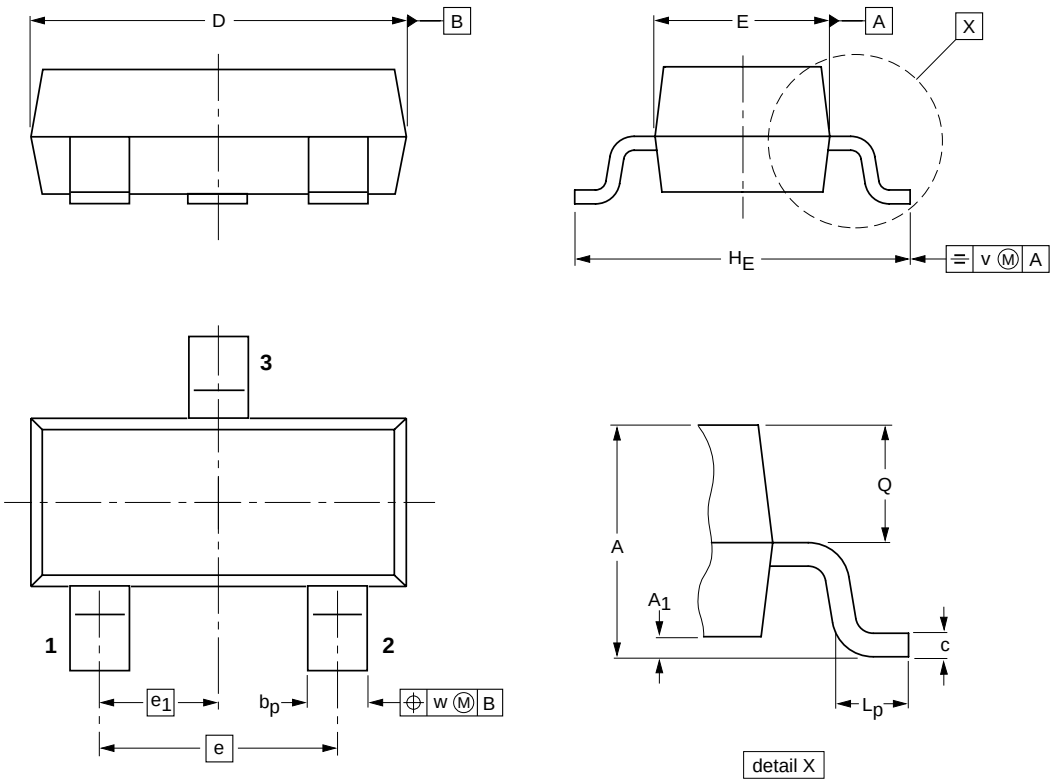

DIMENSIONS (mm are the original dimensions)

UNIT	A	A_1 max.	b_p	c	D	E	e	e_1	H_E	L_p	Q	v	w
mm	1.1 0.9	0.1	0.48 0.38	0.15 0.09	3.0 2.8	1.4 1.2	1.9	0.95	2.5 2.1	0.45 0.15	0.55 0.45	0.2	0.1

OUTLINE VERSION	REFERENCES				EUROPEAN PROJECTION	ISSUE DATE
	IEC	JEDEC	EIAJ			
SOT23		TO-236AB				~~97-02-28~~ 99-09-13

DATA SHEET STATUS

DOCUMENT STATUS[1]	PRODUCT STATUS[2]	DEFINITION
Objective data sheet	Development	This document contains data from the objective specification for product development.
Preliminary data sheet	Qualification	This document contains data from the preliminary specification.
Product data sheet	Production	This document contains the product specification.

Notes

1. Please consult the most recently issued document before initiating or completing a design.
2. The product status of device(s) described in this document may have changed since this document was published and may differ in case of multiple devices. The latest product status information is available on the Internet at URL http://www.nxp.com.

DISCLAIMERS

General — Information in this document is believed to be accurate and reliable. However, NXP Semiconductors does not give any representations or warranties, expressed or implied, as to the accuracy or completeness of such information and shall have no liability for the consequences of use of such information.

Right to make changes — NXP Semiconductors reserves the right to make changes to information published in this document, including without limitation specifications and product descriptions, at any time and without notice. This document supersedes and replaces all information supplied prior to the publication hereof.

Suitability for use — NXP Semiconductors products are not designed, authorized or warranted to be suitable for use in medical, military, aircraft, space or life support equipment, nor in applications where failure or malfunction of an NXP Semiconductors product can reasonably be expected to result in personal injury, death or severe property or environmental damage. NXP Semiconductors accepts no liability for inclusion and/or use of NXP Semiconductors products in such equipment or applications and therefore such inclusion and/or use is at the customer's own risk.

Applications — Applications that are described herein for any of these products are for illustrative purposes only. NXP Semiconductors makes no representation or warranty that such applications will be suitable for the specified use without further testing or modification.

Limiting values — Stress above one or more limiting values (as defined in the Absolute Maximum Ratings System of IEC 60134) may cause permanent damage to the device. Limiting values are stress ratings only and operation of the device at these or any other conditions above those given in the Characteristics sections of this document is not implied. Exposure to limiting values for extended periods may affect device reliability.

Terms and conditions of sale — NXP Semiconductors products are sold subject to the general terms and conditions of commercial sale, as published at http://www.nxp.com/profile/terms, including those pertaining to warranty, intellectual property rights infringement and limitation of liability, unless explicitly otherwise agreed to in writing by NXP Semiconductors. In case of any inconsistency or conflict between information in this document and such terms and conditions, the latter will prevail.

No offer to sell or license — Nothing in this document may be interpreted or construed as an offer to sell products that is open for acceptance or the grant, conveyance or implication of any license under any copyrights, patents or other industrial or intellectual property rights.

Export control — This document as well as the item(s) described herein may be subject to export control regulations. Export might require a prior authorization from national authorities.

Quick reference data — The Quick reference data is an extract of the product data given in the Limiting values and Characteristics sections of this document, and as such is not complete, exhaustive or legally binding.

NXP Semiconductors

Customer notification

This data sheet was changed to reflect the new company name NXP Semiconductors, including new legal definitions and disclaimers. No changes were made to the technical content, except for package outline drawings which were updated to the latest version.

Contact information

For additional information please visit: **http://www.nxp.com**
For sales offices addresses send e-mail to: **salesaddresses@nxp.com**

© NXP B.V. 2009

All rights are reserved. Reproduction in whole or in part is prohibited without the prior written consent of the copyright owner.

The information presented in this document does not form part of any quotation or contract, is believed to be accurate and reliable and may be changed without notice. No liability will be accepted by the publisher for any consequence of its use. Publication thereof does not convey nor imply any license under patent- or other industrial or intellectual property rights.

Printed in The Netherlands 115002/00/03/pp6 Date of release: 1999 Apr 19 Document order number: 9397 750 05694

founded by

PHILIPS